View from C

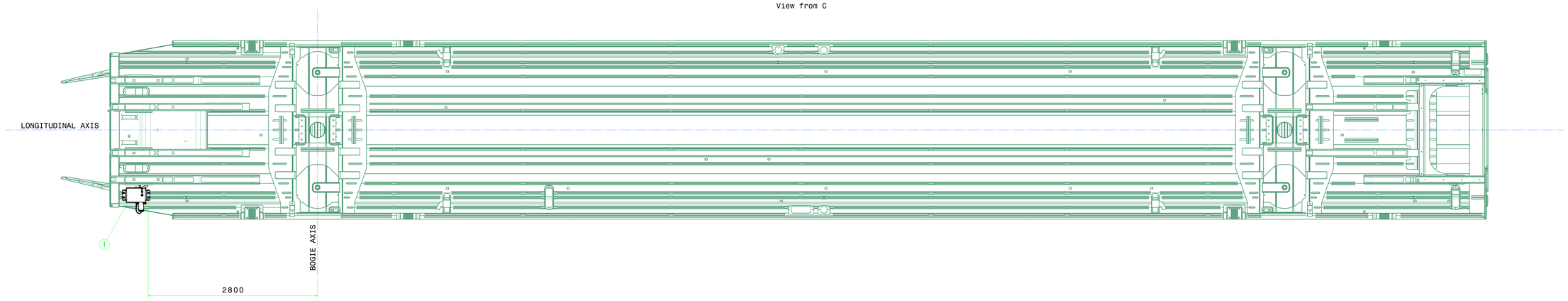

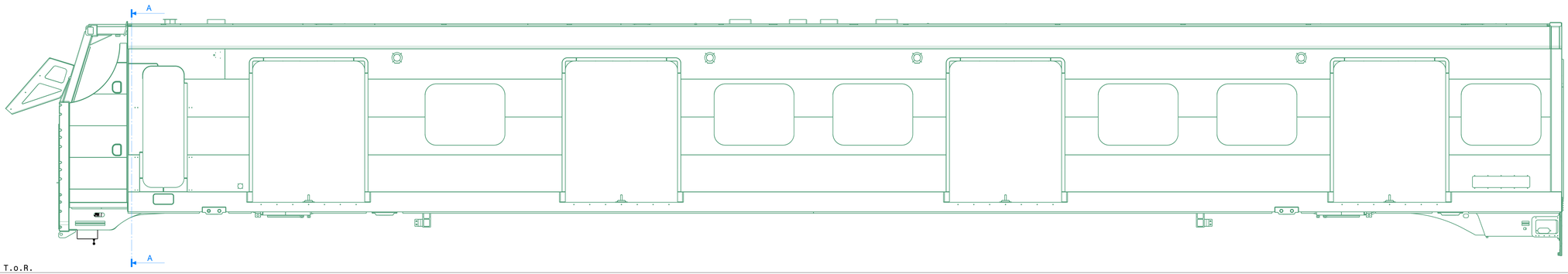

Section view A-A
Scale: 1:10

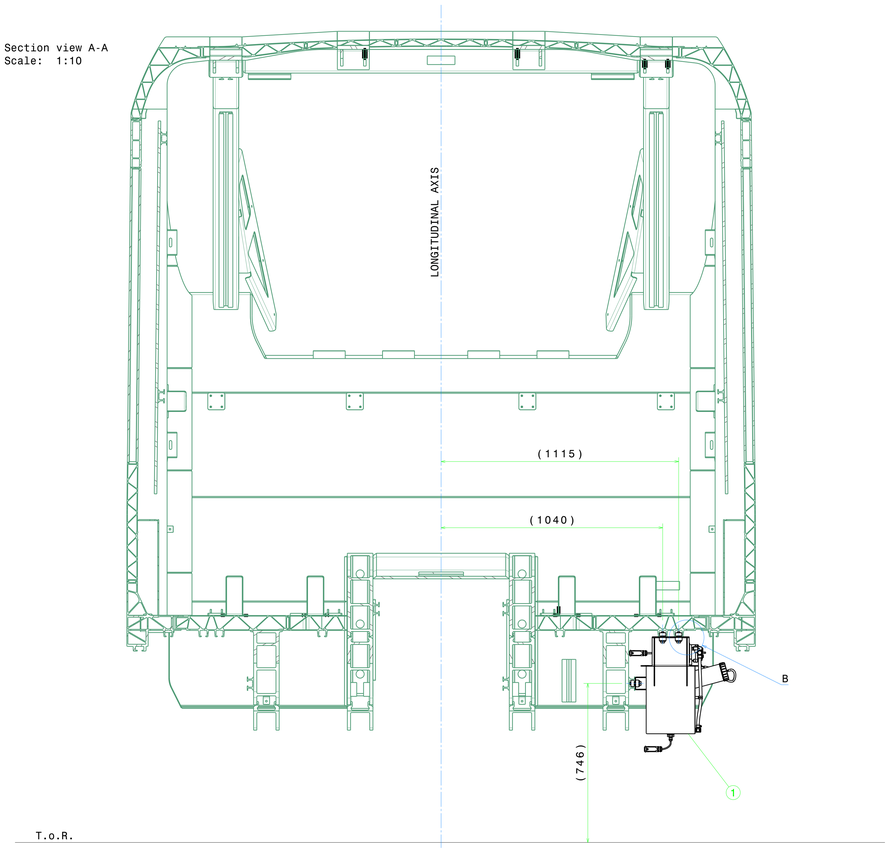

Detail B
Scale: 1:1
(Typical)

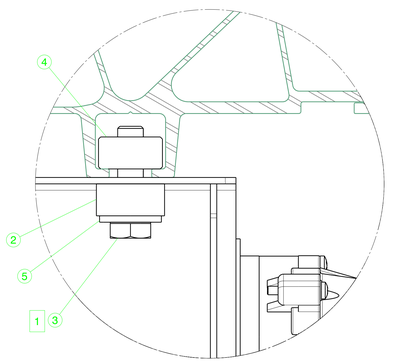

Isometric view

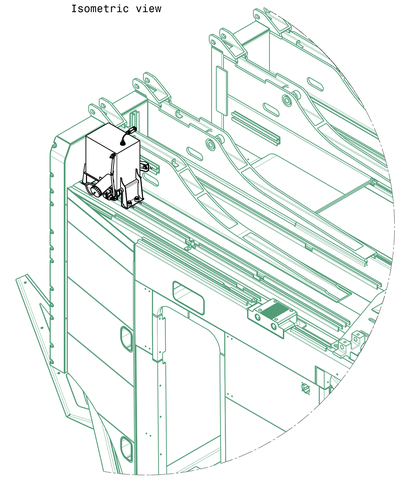

Ref	Torque Nm
1	89

Sign Screws or nuts with paint mark yellow

No	Parça Adý Designation Name of Item	Adet Qty.	Resim No / Norm Drawing No / Norm	Malzeme Material	Ölçü Dimension	Aðýrlýk Weight (Kg)
5	ISO 10670 For M12	5	SP.03001-007JB	8.8	-	-
4	Type 01 M12 x L60	5	SP.02013-120QB	34CrMo4	-	-
3	ISO-4017 M12x45	5	SP.01004-055JB	8.8	-	-
2	C-Slot_Block	5	GZ10.07.04.00001	S355J2 EN10025	-	0,079 kg
1	Water_tank	1	GZ10.12.05.00003	-	-	12,54 7kg
						14,3

ISO 21920-1	ISO 8015	ISO 2553	General Tol.	ISO 2768	f ☐	m☒ H☐ K☒
EN 15085-2 Certification Level		CL1☐ CL2☐ CL3☐	Weld Pro.	ISO 13920	A☐ B☐ E☐ F☐	
			Cast Steel	ISO 12708	Lm2☐ Lr2☐ Sm2☐ Sr2☐	

Approved	L.Giovinazzo	20/04/2023	Scale
Checked	M.Borlo	20/04/2023	1:25
Prepared	F.Felsini	20/04/2023	

TURASAS
Turkish Railway Vehicles Industry Inc.

Windscreen_Water_Tank_Installation
-

GZ10.07.18.00000

TYP

Date:20/04/2023 Sheet : 1/1 Size:A0 Rev: 00

Technical Specifications					
Technical Document					
Fixture/Mould Asset ID.					
Coating/Heat Tre./Roughness					
Paint/Color	-	Modf. No	Modification Description	Date	Sign

<1000	6,0	0,8			
<630	4,0	0,7			
<400	3,0	0,6			
<250	3,0	0,4			
100	2,0	0,3			
40	1,5	0,2			
L mm	Hem	Ypt.			
Nom. Size	Class				
<4000	2,0	0,4			
<2000	1,2	0,4			
<1000	0,8	0,3			
<400	0,5	0,3			
30-120	0,3	0,2			
2-30	0,2	0,1			
L mm	m ±	K ±			
Nom. Size	Class				
>20000	9,0	8,0			
<20000	8,0	7,0			
<16000	7,0	6,0			
<12000	6,0	5,0			
<8000	5,0	4,0			
<4000	4,0	3,0			
<2000	3,0	2,0			
<1000	2,0	1,5			
<400	1,0	1,0			
30-120	1,0	0,5			
2-30	1,0	0,5			
L mm	A ±	E ±			
Nom. Size	Class				

ISO 13920 Welded Construction ISO 2768 General Tolerances TS 12708 Steel Casting

Reproduction, distribution and/or publication of this document or its contents in any form without the prior written permission of TURASAS, is prohibited. Offenders will be liable for the payment of damages. All rights reserved in the event of the grant of a patent, utility model or other protection.